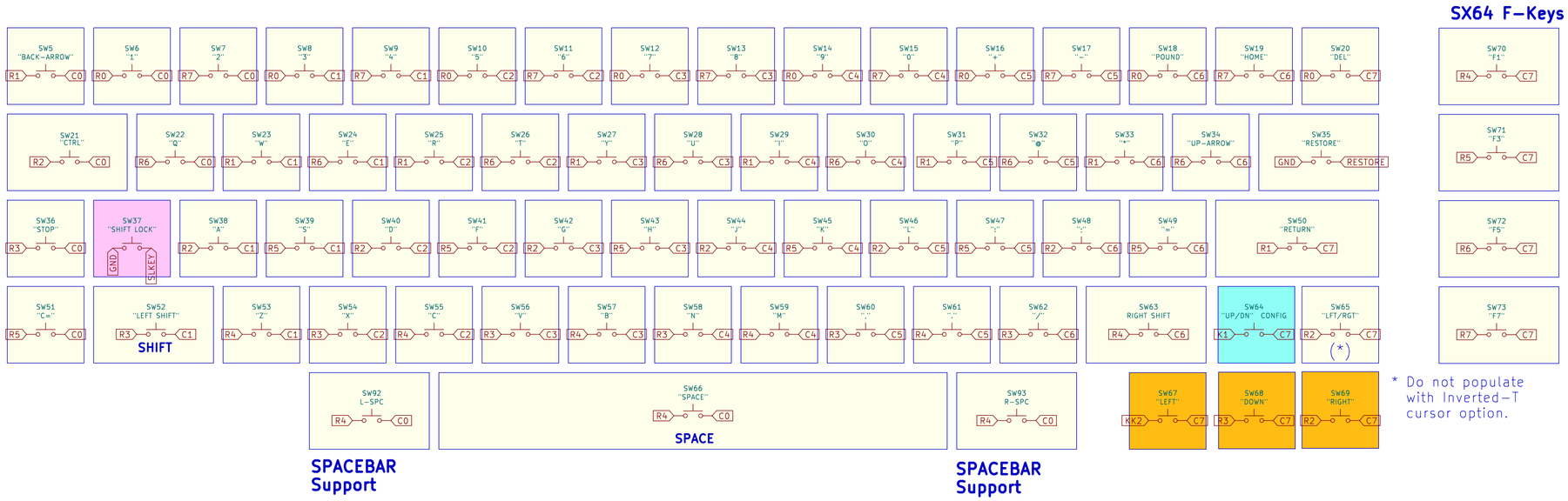

* Do not populate with Inverted-T cursor option.

Legend:

- Normal
- Configurable
- Locking
- Special

INVERTED-T CURSOR

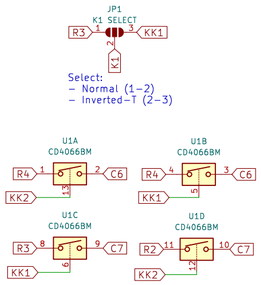

This circut is taken from the C65 schematics. Two keys K1 and KK2 control 4 lines on the 4066 that simulate pressing the SHIFT and DOWN or RIGHT keys as the same time.

SX64/C128 LOCKING KEYS

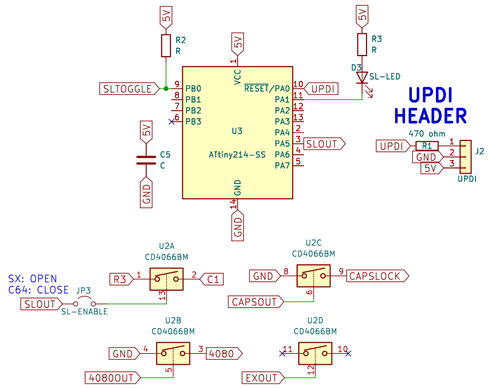

The ATTINY gets input from the locking keys which put GND voltage to the pin. The ATTINY debounces the inputs and toggles the corresponding output to the 4066 chip which connects the keyboard lines.

SX-64 SHIFT-LOCK

The SHIFT-LOCK key is handled by a circuit on the SX-64 motherboard. When SHIFT-LOCK is pressed it grounds PIN-21 and the circuit toggles the shift state, and if ON, puts +5V onto PIN-22.

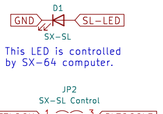

This LED is controlled by SX-64 computer.

This Jumper sets which circuit toggles the SHIFT-LOCK.
1-2: SX-64
2-3: ATTINY

POWER

For C64 you must provide +5V to power the ATTINY and 4066.

For SX-64 power is provided on PIN-4 of DB25 connector.

SX64 DB25 / C64 HEADER

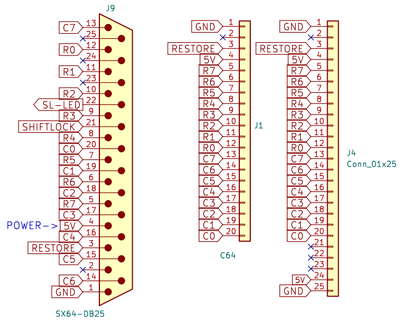

The ROW and COL designations are based on the original VIC-20 keyboard pinout, which is a variation of the PET pinout.

Ensure that the proper jumpers are set for the SHIFT-LOCK key operation!

SX-64: Computer controls SHIFT-LOCK
C64: ATTINY controls SHIFT-LOCK
Requires +5V to be connected!

DESCRIPTION

SX-64 MX Keyboard:

- SX-64 Standard Layout with DB25 plug.
- Optional Inverted-T Cursor for modded case.
- Standard 6U SPACEBAR with stabilizer support.
- OptionL 3D printed 9U SPACEBAR using additional support keys.
- SHIFTLOCK handled by SX-64 or toggle circuit with LED support.
- C64 20-pin header.
- 5V Power header.

NOTES

SX-64 Keyboard thickness:
- Bottom to Top of keycaps...: 19.0 mm
- Bottom to Bottom of keycaps...: 9.0 mm
- Keycap height (tallest).....: 10.0 mm
- Top of Pcb to bottom of keycap: 4.8 mm
- PCB+Sheild.....: 3.2 mm

Created: 2025-10-09 (Simplified C128SX-V1-R1)
Updated: 2025-10-10

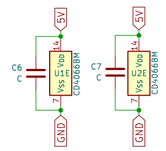

SX-64 MX KEYBOARD

SX64-V1-R1

Steve J. Gray

Sheet: /
File: SX64-mx.kicad_sch

Title: SX-64 MX Keyboard

Size: A2	Date: 2025-10-09	Rev: SX64-V1-R1
KiCad E.D.A. 9.0.4		Id: 1/1